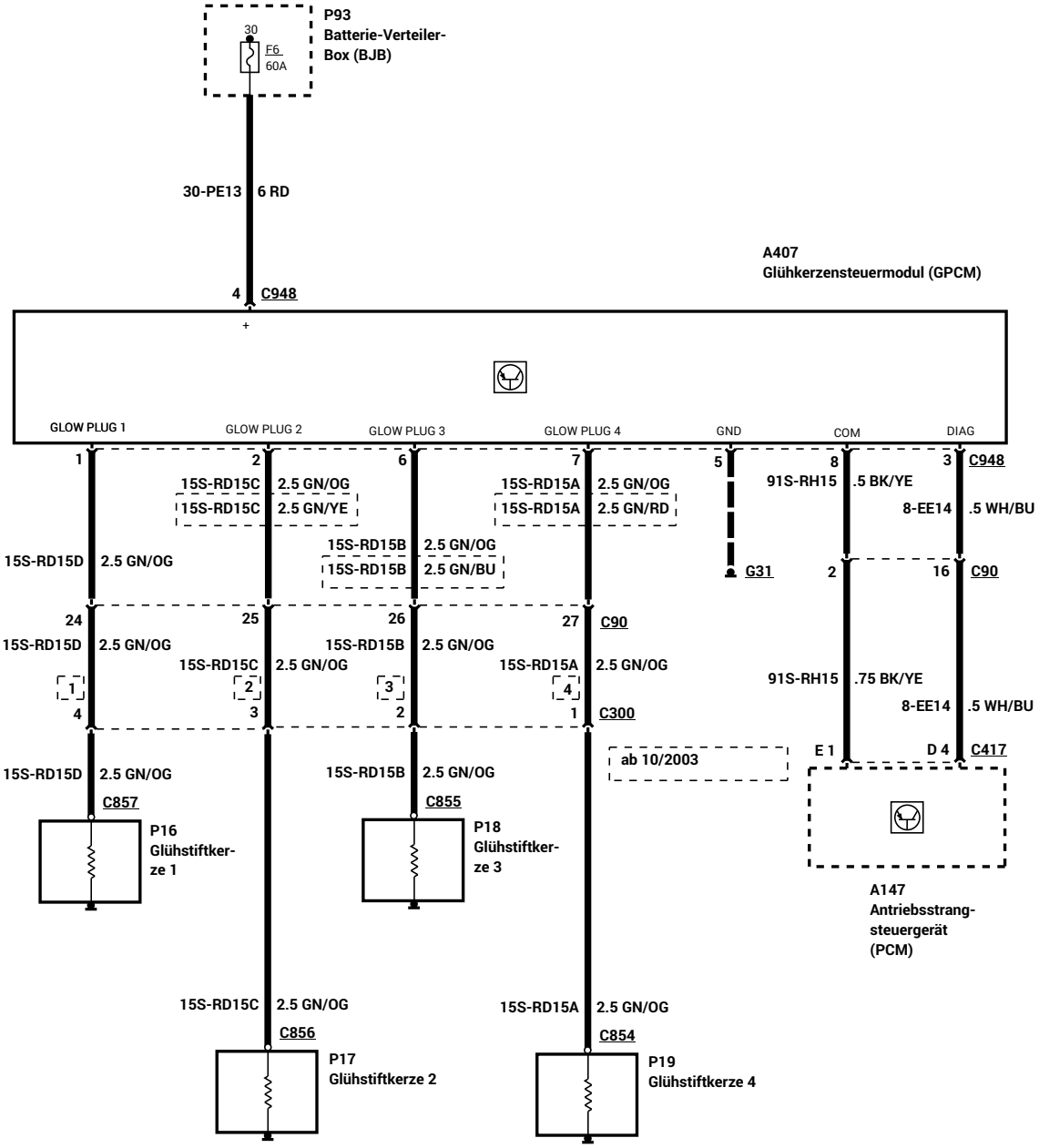C-MAX 2003.75 (06/2003-) Duratorq 2.0L TDCI (136PS) C (Car)